CSAFL 43.3040.25

Colours	Article no.	EAN
black	642588	4043544486691
silver	642589	4043544486707
white	642590	4043544486714

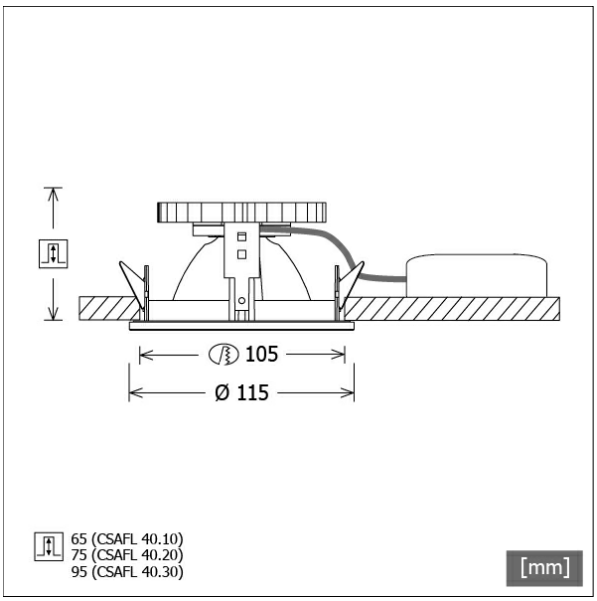

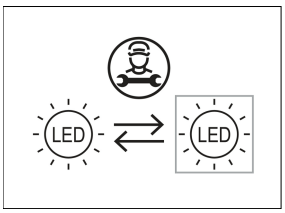

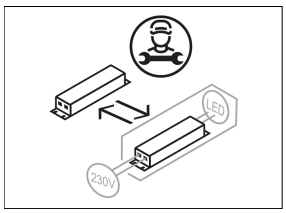

Description

- recessed downlight with high-gloss front design for wide range of applications
- outstanding ease of maintenance
- no UV and thermal emissions
- thermal management with passive cooling (heat sink made from aluminium)
- specular aluminium reflector with precise symmetrical beam characteristic for high luminous efficiency and glare-free lighting
- front ring and recessed ring made from die-cast zinc
- tool-free ceiling mounting via leaf springs (adjustable ceiling thickness)
- luminaire and ballast permanently connected via cable (length: 500 mm), ballast ready for mains connection
- ballast (LED converter) included (external placement)

Standard options

2700 K · 3000 K · DALI · SP · WF

Special options

SCHWARZ · 3500 K · CRI 90 SDCM3 · BAKERY · MEAT · PRODUCE · FASHION · TWL · TWPI · MinusBlue · CASAMBI · BETON EINBAU

Lighting data / Norms

Lamps	LED Spot / CRI 80 / 4000 K
EPREL light sources	851282
Lifetime	L90 B50 50.000 h L80 B50 100.000 h L80 B20 50.000 h
System power	36.0 W
Luminaire luminous flux	3810 lm
System efficiency	105.83 lm/W
Module efficiency	162.17 lm/W
UGR class	≤22
Beam range	Medium Flood
Beam angle	23°
Supply voltage	220 - 240 V / 50 - 60 Hz
Protection class	II
Type of protection	IP20

Dimensions / Weights

Outer diameter	115 mm
Height	100 mm
Cut-out (Ø)	105 mm
Ceiling thickness	3.0 - 25.0 mm
Recessed depth	95 mm
Net weight	0.77 kg
Gross weight	0.86 kg

© LTS Licht & Leuchten GmbH · lts-light.com · Technical data are subject to change. · Version: 25.04.2024

CSAFL 43.3040.25

CSA 40 Flat (1xLED 36W 840/4000K 3810lm 25 °)

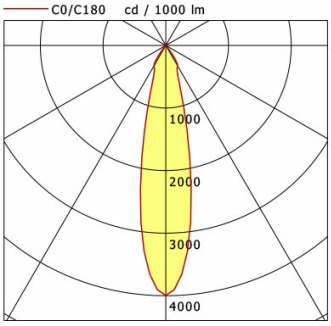

	C0	C90	C180	C270
0°	3996	3996	3996	3996
15°	1218	1218	1218	1218
30°	381	381	381	381
45°	8	8	8	8
60°	3	3	3	3
75°	2	2	2	2
90°	0	0	0	0
cd / 1000 lm				

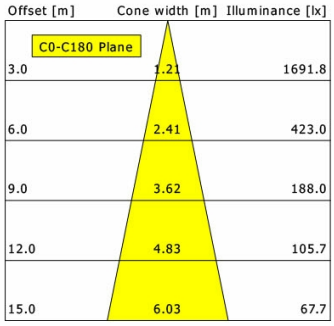

η	LED
Efficiency	106 lm/W
Direct/Indirect	↓ 100% / ↑ 0%
System Power	36 W
UGR	X=4H, Y=8H
Reflection factors	70/50/20
UGR C0/C180	20.5
UGR C90/C270	20.5
CIE Flux Codes	99 99 100 100 100
Ra/CRI	>80

LTS