CSALP 40.1027.50

Colours	Article no.	EAN
black	633284	4043544402233
silver	634676	4043544368447
white	634678	4043544368454

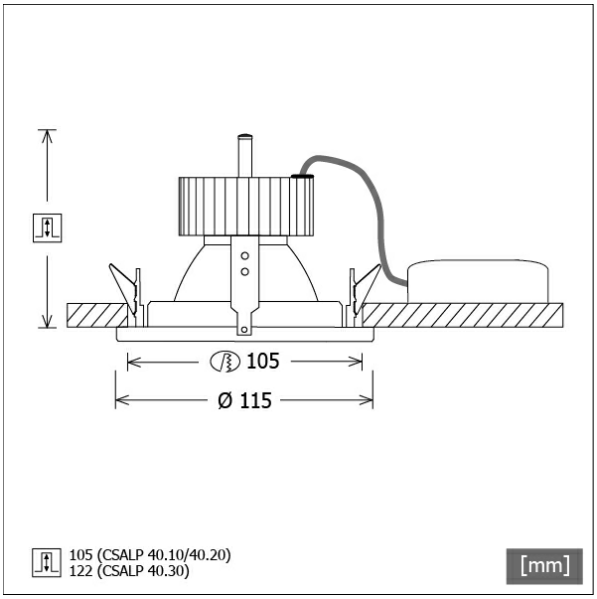

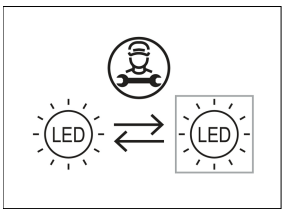

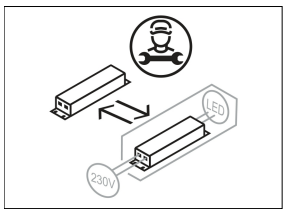

Description

- recessed downlight with wide range of applications
- outstanding ease of maintenance
- no UV and thermal emissions
- thermal management with passive cooling (heat sink made from aluminium)
- specular aluminium reflector with precise symmetrical beam characteristic for high luminous efficiency and glare-free lighting
- front ring and recessed ring made from die-cast zinc
- tool-free ceiling mounting via leaf springs (adjustable ceiling thickness)
- luminaire and ballast permanently connected via cable (length: 500 mm), ballast ready for mains connection
- ballast (LED converter) included (external placement)

Standard options

3000 K · 4000 K · DALI

Special options

3500 K · BAKERY · MEAT · PRODUCE · FASHION · TWL · TWPI · CASAMBI · BETON EINBAU

Lighting data / Norms

Lamps	LED Spot / CRI 80 / 2700 K
EPREL light sources	848120
Lifetime	L90 B50 50.000 h L80 B50 100.000 h L80 B20 50.000 h
System power	14.0 W
Luminaire luminous flux	1330 lm
System efficiency	95.00 lm/W
Module efficiency	127.18 lm/W
UGR class	≤19
Beam angle	50°
Supply voltage	220 - 240 V / 50 - 60 Hz
Protection class	II
Type of protection	IP20

Dimensions / Weights

Outer diameter	115 mm
Height	110 mm
Cut-out (Ø)	105 mm
Ceiling thickness	3.0 - 25.0 mm
Recessed depth	105 mm
Net weight	0.60 kg
Gross weight	0.64 kg

© LTS Licht & Leuchten GmbH · lts-light.com · Technical data are subject to change. · Version: 26.04.2024

CSALP 40.1027.50

CSA 40 (1xLED 14W 827/2700K 1330lm 50 °)

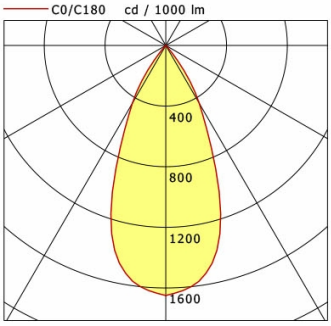

	C0	C90	C180	C270
0°	1650	1650	1650	1650
15°	1345	1345	1345	1345
30°	440	440	440	440
45°	8	8	8	8
60°	2	2	2	2
75°	3	3	3	3
90°	0	0	0	0
cd / 1000 lm				

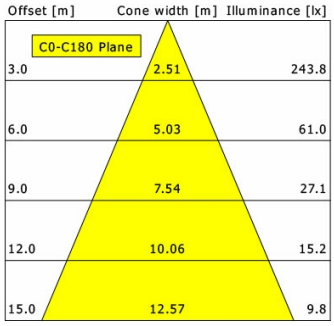

η	LED
Efficiency	95 lm/W
Direct/Indirect	↓ 100% / ↑ 0%
System Power	14 W
UGR	X=4H, Y=8H
Reflection factors	70/50/20
UGR C0/C180	17.3
UGR C90/C270	17.3
CIE Flux Codes	98 99 100 100 100
Ra/CRI	>80

LTS