CSALP 60.2030.25/DALI

Colours	Article no.	EAN
black	643177	4043544493866
silver	643178	4043544493873
white	643179	4043544493880

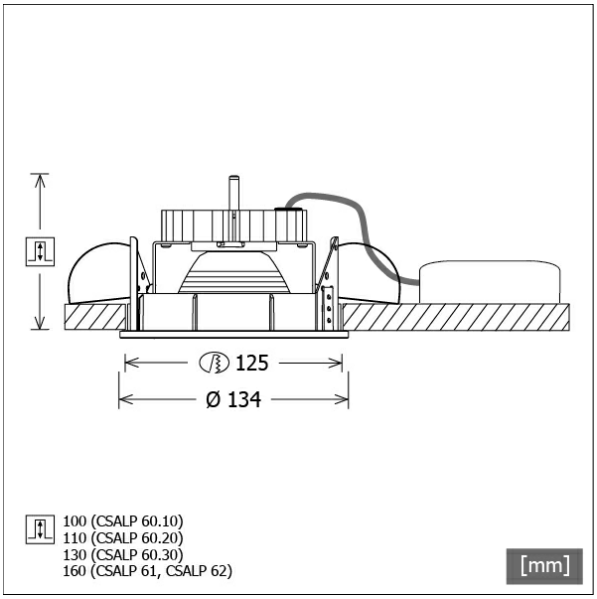

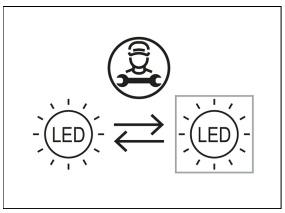

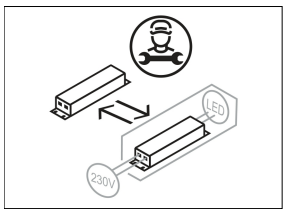

Description

- recessed spotlight with wide range of applications
- luminaire rotates through 350° and pivots through 40°
- outstanding ease of maintenance
- no UV and thermal emissions
- thermal management with passive cooling (heat sink made from aluminium)
- specular aluminium reflector with precise symmetrical beam characteristic for high luminous efficiency and glare-free lighting
- front rings and recessed ring made from die-cast zinc
- tool-free ceiling mounting via quick-action clamping springs (automatic adjustment of the ceiling thickness)
- luminaire and ballast permanently connected via cable (length: 500 mm), ballast ready for mains connection
- ballast (LED converter DALI, dimmable) included (external placement)

Standard options

2700 K · 4000 K · BAKERY · MEAT

Special options

3500 K · CRI 90 SDCM3 · MEAT · PRODUCE · FASHION · TWL · TWPI · MinusBlue · CASAMBI · LUMEN PLUS · BETON EINBAU

Lighting data / Norms

Lamps	LED Spot / CRI 80 / 3000 K
EPREL light sources	848117
Lifetime	L90 B50 50.000 h L80 B50 100.000 h L80 B20 50.000 h
System power	27.0 W
Luminaire luminous flux	2730 lm
System efficiency	101.11 lm/W
Module efficiency	156.64 lm/W
UGR class	≤19
Beam angle	25°
Supply voltage	220 - 240 V / 50 - 60 Hz
Protection class	II
Type of protection	IP20

Dimensions / Weights

Outer diameter	134 mm
Height	100 mm
Cut-out (Ø)	125 mm
Ceiling thickness	1.0 - 25.0 mm
Recessed depth	110 mm
Net weight	1.08 kg
Gross weight	1.14 kg

© LTS Licht & Leuchten GmbH · lts-light.com · Technical data are subject to change. · Version: 27.04.2024

CSALP 60.2030.25/DALI

CSA 60 (1xLED 27W 830/3000K 2730lm 25 °)

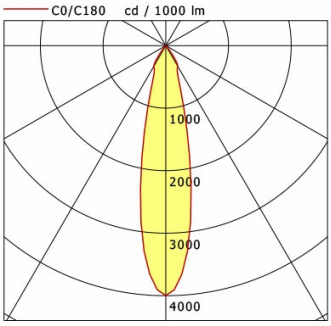

	C0	C90	C180	C270
0°	3997	3997	3997	3997
15°	1216	1216	1216	1216
30°	384	384	384	384
45°	7	7	7	7
60°	3	3	3	3
75°	2	2	2	2
90°	0	0	0	0

cd / 1000 lm

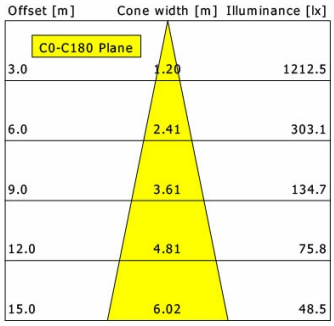

η	LED
Efficiency	101 lm/W
Direct/Indirect	↓ 100% / ↑ 0%
System Power	27 W
UGR	X=4H, Y=8H
Reflection factors	70/50/20
UGR C0/C180	19.3
UGR C90/C270	19.3
CIE Flux Codes	99 99 100 100 100
Ra/CRI	>80

LTS

Accessories

ZB-OR DONGLE
Organic Response IR dongle kit

ZB-OR GATEWAY
Organic Response IoT Gateway Cascade Series

ZB-OR-R SENSOR
Organic Response sensor for recessed mounting

ZDAR 125.145-205
compensation ring for ceiling cut-outs from 145 to 205 mm