CSARL 71.3030.15/DALI

Colours	Article no.	EAN
black	650594	4043544589286
silver	650595	4043544589293
white	650596	4043544589309

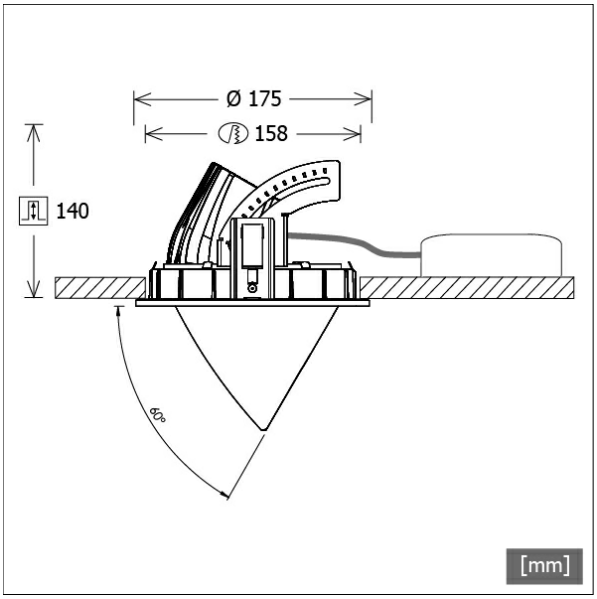

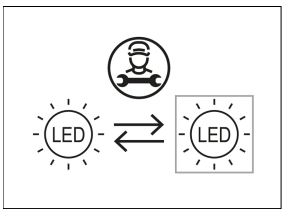

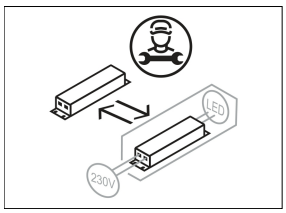

Description

- recessed spotlight with conical light-head
- suitable for lighting of vertical surfaces (shadowless wall lighting up to the ceiling edge)
- light-head rotates through 355° and pivots out through 60°
- outstanding ease of maintenance
- no UV and thermal emissions
- thermal management with passive cooling (heat sink made from die-cast aluminium)
- high performance specular aluminium reflector with precise symmetrical beam characteristic for highest luminous efficiency and best glare-free lighting
- front/recessed ring and light-head made from die-cast zinc
- clear and reflection-free EnergyVision safety glass
- tool-free ceiling mounting via quick-action clamping springs (safety rope, automatic adjustment of the ceiling thickness)
- luminaire and ballast permanently connected via cable (length: 500 mm), ballast ready for mains connection
- ballast (LED converter DALI, dimmable) included (external placement)

Standard options

2700 K | 4000 K | BAKERY | MF | FL | WF

Special options

3500 K | CRI 90 SDCM3 | MEAT | PRODUCE | FASHION | TWL | TWPI | MinusBlue | CASAMBI | BETON EINBAU

Lighting data / Norms

Lamps	LED Spot / CRI 80 / 3000 K
EPREL light sources	1070946
Lifetime	L90 B50 50.000 h L80 B50 100.000 h L80 B20 50.000 h
System power	29.0 W
Luminaire luminous flux	3230 lm
System efficiency	111.37 lm/W
Module efficiency	166.62 lm/W
UGR class	≤19
Beam range	Spot
Beam angle	19°
Supply voltage	220 - 240 V / 50 - 60 Hz
Protection class	II
Type of protection	IP20

Dimensions / Weights

Outer diameter	175 mm
Height	145 mm
Cut-out (Ø)	158 mm
Ceiling thickness	1.0 - 25.0 mm

© LTS Licht & Leuchten GmbH · lts-light.com · Technical data are subject to change. · Version: 20.04.2024

CSARL 71.3030.15/DALI

Recessed depth	140 mm
Diameter of light head	114 mm
Net weight	2.67 kg
Gross weight	2.85 kg

© LTS Licht & Leuchten GmbH · lts-light.com · Technical data are subject to change. · Version: 20.04.2024

CSARL 71.3030.15/DALI

CSA 71 Round (1xLED 29W 830/3000K 3230lm 15 °)

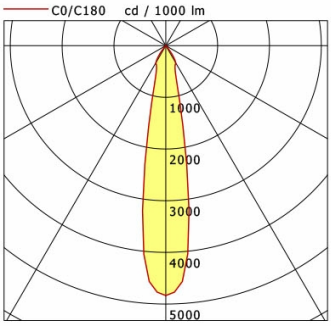

	C0	C90	C180	C270
0°	4835	4835	4835	4835
15°	939	939	939	939
30°	381	381	381	381
45°	7	7	7	7
60°	6	6	6	6
75°	3	3	3	3
90°	0	0	0	0

cd / 1000 lm

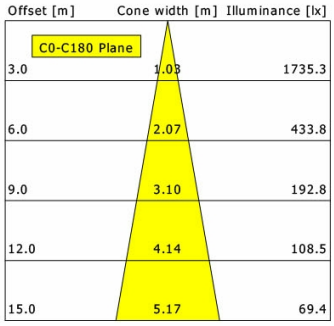

η	LED
Efficiency	112 lm/W
Direct/Indirect	↓ 100% / ↑ 0%
System Power	29 W
UGR	X=4H, Y=8H
Reflection factors	70/50/20
UGR C0/C180	19.0
UGR C90/C270	19.0
CIE Flux Codes	98 99 100 100 100
Ra/CRI	>80

LTS

Accessories

ZB-OR DONGLE
Organic Response IR dongle kit

ZB-OR GATEWAY
Organic Response IoT Gateway Cascade Series

ZB-OR-R SENSOR
Organic Response sensor for recessed mounting